# LEVER LATCH AND DEADBOLT PACK INSTRUCTIONS

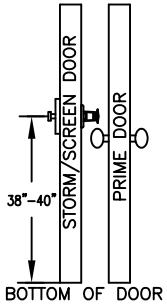


FIG. 1

## Drilling Instructions

1. Locate the drilling template on your storm door at the desired height being sure this hardware does not interfere with the prime door hardware, see Fig. 1. (We recommend 38"–40" measured from the bottom of the door to the center of the outside lever assembly.)
2. Tape the template to the storm door.
3. Follow drilling instructions on template.

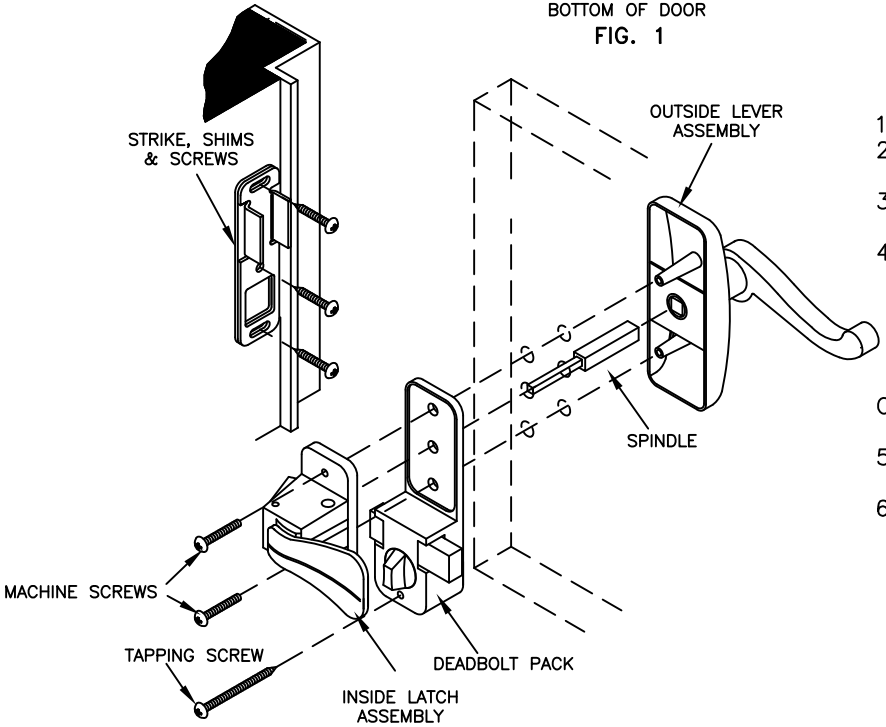


FIG. 2

## Latch and Deadbolt Pack Installation

1. Rotate handle so it is aligned as shown in Fig. 2.
2. Insert the spindle into the square hole on the underside of the outside lever assembly.
3. Guide this assembly through the three drilled holes in the outside face of the door.
4. Guide the inside latch assembly over the square spindle and onto the deadbolt pack, insert the short machine screws through the inside latch and into the threaded bosses of the outside and draw up snugly.

CAUTION: DO NOT OVER TIGHTEN OR LATCH MAY BIND

5. Install the tapping screw into the bottom hole of the deadbolt pack.
6. Install steel strike on jamb to engage the latch bolt on inside latch. If required, use enclosed shims to extend strike. Mark and chisel clearance for the deadbolt into the jamb, if necessary.